ROAD-BUILDING MACHINERY
AND MUNICIPAL EQUIPMENT

ANTTECH.RU

ant

# A FAMILY OF HARDWORKING MACHINERY

# ENGINEERING PRODUCTS

JSC Kovrov Electromechanical Plant is a diversified enterprise with impressive production capabilities. One of JSC KEMP's specialization is the manufacturing of multifunctional mini-loaders, frontal loaders, backhoe loaders, hitched and vehicle-mounted lifters (hoisters), hydrostatic transmissions and tractors. Reliability and high quality of KEMP's engineering products is evidenced by international and domestic certificates of conformity.

1077

MULTIFUNCTIONAL MINI-LOADERS

# Ant 750

## TECHNICAL SPECIFICATIONS

| | |
|---|---|
| Operating mass | – 3056/2990/2990 kg |
| Mass in transportation position without a bucket | – 2990/2840/2840 kg |
| Standard bucket volume | – 0,46 м³ |
| Rated loading capacity | – 750 kg |
| Tipping load | – 1500 kg |
| Maximum movement speed | – 12 km/h |
| Gradeability (down) | – 25⁰ |
| Gradeability (up) | – 18⁰ |
| Gradeability (transverse slope) | – 12⁰ |
| Traction force (calculated) | – 18 (20,8) kN |
| Fuel consumption | – 4,5 l/h |

### TRANSMISSION:

| | |
|---|---|
| Type of transmission | – Hydrostatic |
| Drive | – Roller chain with sprockets (oil lubricated) in a sealed chain gear housing. 3 chains from each side |
| Brakes | – Hydraulic, built in hydraulic motor |
| Discs | – 9,0" – 15,3"FO |
| Tyres | – 10/75x15,3 |

### OPERATING ELEMENTS AND MOVEMENT CONTROL:

| | |
|---|---|
| Type | – Servo control (movement, boom, bucket)<br>– Electrical control (additional equipment) |

### ELECTRICAL EQUIPMENT:

| | |
|---|---|
| Voltage | – 12 V |
| Accumulator capacity | – 12 V / 90 Ah |
| Generator | – 14 V / 65 A |
| Lights (front/rear working area) | - halogen (2/2 pcs.) |

ant 750
СКБ ПА
СТД-49

05

# ENGINE

| | MMZ | PERKINS | KUBOTA |
|---|---|---|---|
| Engine model | MMZ-4D-01 | 404 D-22 | V2403-M-E3B |
| Cooling system | fluid | fluid | fluid |
| Full engine power | 36,0 kWt | 37,3 kWt | 36,5 kWt |
| Cubic capacity | 2,1 l | 2,2 l | 2,434 l |
| Number of cylinders | 4 | 4 | 4 |
| Cylinders arrangement | row | row | row |
| Crankshaft rotation frequency | 2800 rpm | 2800 rpm | 2700 rpm |
| Weight | 250 kg | 184 kg | 184 kg |

# HYDRAULIC SYSTEM

| | |
|---|---|
| Pump type | - pump installation (tandem) |
| Type of hydraulic motors | - gerotor motor (2 pcs.) |
| Pump type | - gear type hydraulic pump |
| Distribution valve | -3-section type |
| Cooling system | - from motor fan |
| Bucket adjustment function | - automatic |

**MOTION DRIVE CIRCUIT**

| | |
|---|---|
| Flow | - 78 l/min |
| Safety valve pressure | - 28 MPa |

**CONTROL CIRCUIT**

| | |
|---|---|
| Flow | - 43 l/min |
| Safety valve pressure | - 2,7 MPa |

**OPERATING EQUIPMENT CIRCUIT**

| | |
|---|---|
| Flow | - 61 l/min |
| Safety valve pressure | - 18 MPa |
| Jet action valves pressure | - 22 MPa |

# Ant 1000

## TECHNICAL SPECIFICATIONS

| | |
|---|---|
| Operating mass | – 3510/3360/3450 kg |
| Mass in transportation position without a bucket | – 3350/3290/3290 kg |
| Standard bucket volume | – 0,52 $m^3$ |
| Rated loading capacity | – 1000 kg |
| Tipping load | – 2000 kg |
| Maximum movement speed | – 14 km/h |
| Gradeability (down) | – $25^0$ |
| Gradeability (up) | – $18^0$ |
| Gradeability (transverse slope) | – $12^0$ |
| Traction force (calculated) | – 19 (26) kN |
| Fuel consumption | – 5,5 l/h |

### TRANSMISSION:

| | |
|---|---|
| Type of transmission | – Hydrostatic |
| Drive | – Roller chain with sprockets (oil lubricated) in a sealed chain gear housing. 2 chains from each side |
| Brakes | – Hydraulic, built in hydraulic motor |
| Discs | – 9,75" - 16,5"FO |
| Tyres | – 12-16,5 |

### OPERATING ELEMENTS AND MOVEMENT CONTROL:

| | |
|---|---|
| Type | – Servo control (movement, boom, bucket)<br>– Electrical control (additional equipment) |

### ELECTRICAL EQUIPMENT:

| | |
|---|---|
| Voltage | – 12 V |
| Accumulator capacity | – 12 V / 140 Ah |
| Generator | – 14 V / 65 A |
| Lights (front/rear working area) | – Halogen (2/2 pcs) |

1000.01

09

# ENGINE

| | KUBOTA | JOHN DEERE | MMZ |
|---|---|---|---|
| Engine model | V3300 | 4045DF270 | D-243S2-2778 |
| Cooling system | fluid | fluid | fluid |
| Full engine power | 54 kWt | 55 kWt | 60 kWt |
| Cubic capacity | 3,3 l | 4,5 l | 4 l |
| Number of cylinders | 4 | 4 | 4 |
| Cylinders arrangement | row | row | row |
| Maximum torque | 244 Nm (1400rpm) | 283 Nm (1200rpm) | 298 Nm (1600rpm) |
| Cylinders arrangement | row | row | row |
| Weight | 246 kg | 387 kg | 430 kg |

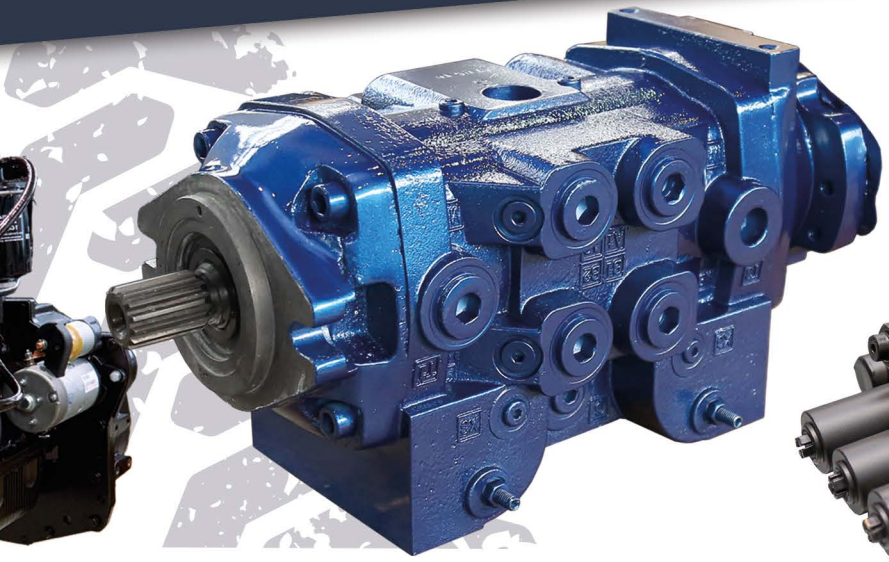

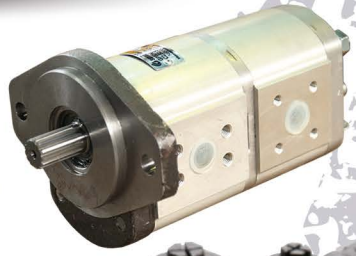

# HYDRAULIC SYSTEM

| | |
|---|---|
| Pump type | - pump installation (tandem) |
| Type of hydraulic motors | - gerotor motor (2 pcs.) |
| Pump type | - gear type hydraulic pump |
| Distribution valve | -3-section type |
| Cooling system | -from motor fan |
| Bucket adjustment function | - automatic |

**MOTION DRIVE CIRCUIT**

| | |
|---|---|
| Flow | - 115 l/min |
| Safety valve pressure | – 3,5 MPa |

**CONTROL CIRCUIT**

| | |
|---|---|
| Flow | - 55 l/min |
| Safety valve pressure | - 2,5 MPa |

**OPERATING EQUIPMENT CIRCUIT**

| | |
|---|---|
| Flow | - 76 l/min |
| Safety valve pressure | - 18 MPa |
| Jet action valves pressure | - 22 MPa |

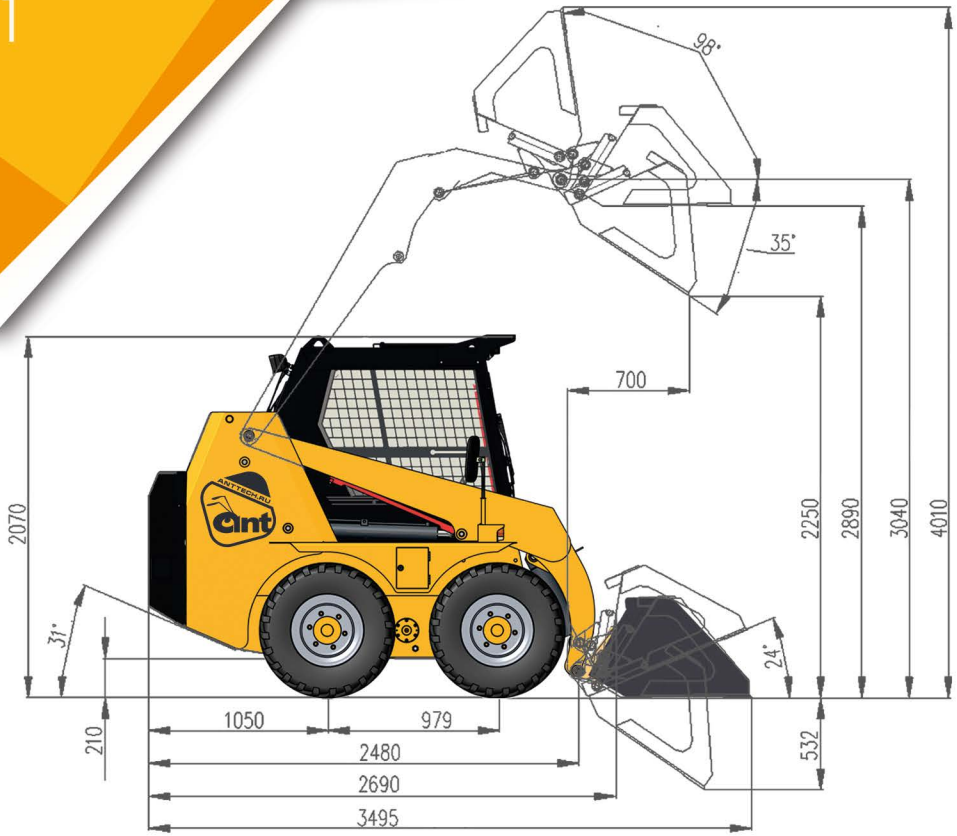
98°
35°
700
2070
2250
2890
3040
4010
31°
24°
210
1050
979
2480
2690
3495
532

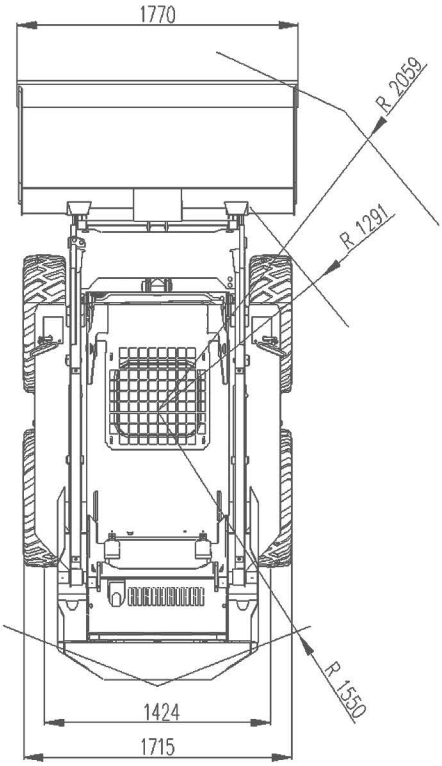
1770
R 2059
R 1291
R 1550
1424
1715

# Ant 750

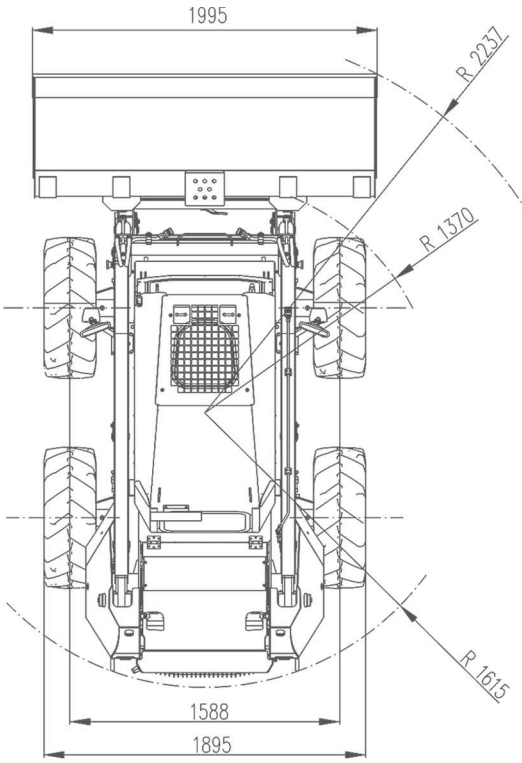
1995
R 2237
R 1370
R 1615
1588
1895

82°
42°
409
4580
3640
3350
2900
2078
26°
612
42°
128
1234
937
2838
3650/3614
256
29°

# Ant 1000

# Ant 1000

## ADDITIONAL OPTION

Self-contained "Sleeping Well Oblo Twin" cooler is equipped with double Secop BD350GH compressor, that ensures excellent cooling performances, reaching the power value of 1800 watt. The system is charged with environmentally compatible R134a gas. The cooler is quickly and easily installed in the hatch on miniloader cabin. No specific equipment is required. The cold from the cooler is smoothly distributed throughout the cabin.

**CONDITIONER**

"Sleeping Well OBLO TWIN" (Italy)

| | |
|---|---|
| Power supply | - 24 V |
| Number of fan modes | – 6 |
| Electronic control panel | + |
| Remote control console | + |
| Temperature control | + |
| Timer | + |

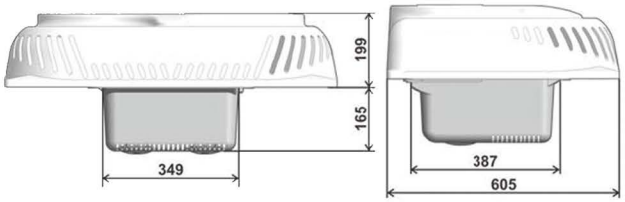


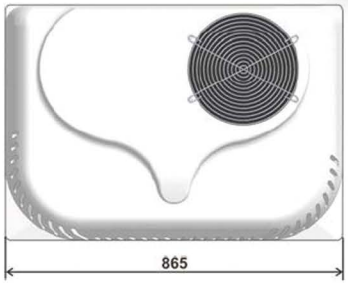

indel B
sleeping well ablo
indel B

The variety of attachments allows just one loader to carry out more than 10 tasks, making this machinery universal and multifunctional. Replacing an attachment by another one takes less than a minute* due to the universal system of fasteners.

* - It depends on an operator's mastership

# ATTACHMENTS

## FOR MULTIFUNCTIONAL MINI-LOADERS

## QUARRY BUCKET

| | |
|---|---|
| Width | 1995 mm |
| Volume | 0,52 m³ |
| Weight | 195 kg |
| Number of teeth | 10 pcs |

## FORK CLAMP

| | |
|---|---|
| Width | 1800/2000 mm |
| Volume | 0,35/0,53 m³ |
| Clamp opening | 750 mm |
| Entering angle | 85° |
| Number of teeth | 7-9 pcs |
| Weight | 380/440 kg |

## STANDARD BUCKET

| | |
|---|---|
| Width | 1700/1995 mm |
| Volume | 0,46-0,53 m3 |
| Weight | 180 kg |

## MOUNTED EXCAVATOR

| | |
|---|---|
| Bucket volume | 0,075 $m^3$ |
| Digging depth | 3200 mm |
| Loading height | 2400 mm |
| Length with loader | 4500 mm |
| Height with lifted bucket | 3100 mm |
| Weight | 860 kg |

## EXTENDED PALLET FORK

| | |
|---|---|
| Slide width | 1100 mm |
| Loading capacity | 2000 kg |
| Lifting height | 3450 mm |
| Tow hook length | 1200 mm |
| Weight | 160 kg |

## ANGLED BLADE

| | |
|---|---|
| Operation control | manual/hydraulic |
| Operating width | 2000 mm |
| Turning angle | 30° |
| Weight | 255/267 kg |

## DRILLING INSTALLATION

| | |
|---|---|
| Drilling tool diameter | 150/200/300/400 mm |
| Hydraulic flow | 78 l/min |
| Torque | 2100 Nm |
| Drilling depth | 2000 mm |
| Weight | 130 kg |

## MOUNTED CULTIVATOR

| | |
|---|---|
| Width | 2000 mm |
| Cultivation depth | 160 mm |
| Revolution number | 100 rpm |
| Blade number | 40 pcs |
| Operating width | 1700 mm |
| Adjustment type | mechanical |
| Drive type | hydraulic |
| Weight | 300 kg |

## HYDRAULIC HAMMER

| | |
|---|---|
| Hammer length | 920 mm |
| Impact frequency | 800-1600 bpm |
| Hydraulic flow | 78 l/min |
| Oil flow | 30-50 l/min |
| Operating pressure | 90-130 bar |
| Impact power | 630 J |
| Pick diameter | 68 mm |
| Weight | 275 kg |

## WATER-SPRAY BROOM

| | |
|---|---|
| Broom diameter | 550 mm |
| Turning angle | 30° |
| Weight | 220 kg |
| Tank volume | 200 l |
| Operating width | 1800 mm |
| Operation control | manual |

## HOPPER BROOM

| | |
|---|---|
| Broom disc number | 47 pcs |
| Brush diameter | 550 mm |
| Operating width with additional broom | 1950 mm |
| Operating width | 1800 mm |
| Height | 1100 mm |
| Length | 1400 mm |
| Hopper volume | 0,5 $m^3$ |
| Weight (basic configuration) | 445 kg |
| Unladen Weight | 525 kg |
| Add. options | hydraulic wetting, gutter broom |

## HIGH-PRESSURE WASHING MACHINE

| | |
|---|---|
| Maximum water consumption | 15/30 l/min |
| Tank volume | 300/500 l |
| Maximum water pressure | 20 mPa |
| Length of high-pressure hose | 15 m |
| Maximum number of nozzles | 5/7 pcs |
| Weight | 140/160 kg |

## CARRYING RAM AND BUCKET

| | |
|---|---|
| Width | 1600/1800 mm |
| Hydraulic flow | 25-40/ 35-50 l/min |
| Clamp type | double, hydraulic |
| Gripping type | bucket/ram |
| Loading | 1500 kg |
| Weight | 390/430 kg |

## DEICING AGENT SPREADER

| | |
|---|---|
| Operating pressure | 18 MPa |
| Spreading width | 15 m |
| Tank volume | 0,4 $m^3$ |
| Operation speed | 6 km/h |
| Maximum height | 1104 mm |
| Length | 1120 mm |
| Width | 1416 mm |
| Mass | 230 kg |

## ROTARY SNOW PLOUGH

| | |
|---|---|
| Snow throw distance | 7 m |
| Performance | 8 t/h |
| Operating width | 1730 mm |
| Cleaning speed | 5 km/h |
| Width | 1796 mm |
| Length | 987 mm |
| Weight | 295 kg |

## ROAD SCRAPER

| | |
|---|---|
| Operating width | 400 mm |
| Travel speed | 80m/h |
| Operating depth | 100 mm |
| Operating flow | 45-80 l/min |
| Pressure | 16-20 MPa |
| Cutting teeth number | 42 pcs |
| Mass | 520 kg |

## TRENCH EXCAVATOR

| | |
|---|---|
| Maximum performance | 60 m/h |
| Trench depth | 1200 mm |
| Trench width | 160 mm |
| Length | 2000 mm |
| Width | 1372 mm |
| Weight | 280 kg |

Additional information
about ANT products:

- special offers;
- government support;
- optional equipment

on the web site or at the official dealer.

# www.anttech.ru

**JSC KOVROV ELECTROMECHANICAL PLANT**
601919, Russia, Vladimir region,
Kovrov, Krupskoj str., 55
tel.: +7 (49232) 9-39-65, 9-39-64, 9-30-35
e-mail:ant@kemz.org

KOVROV ELECTROMECHANICAL PLANT
KEMP
www.kemz.org

**Dealer:**